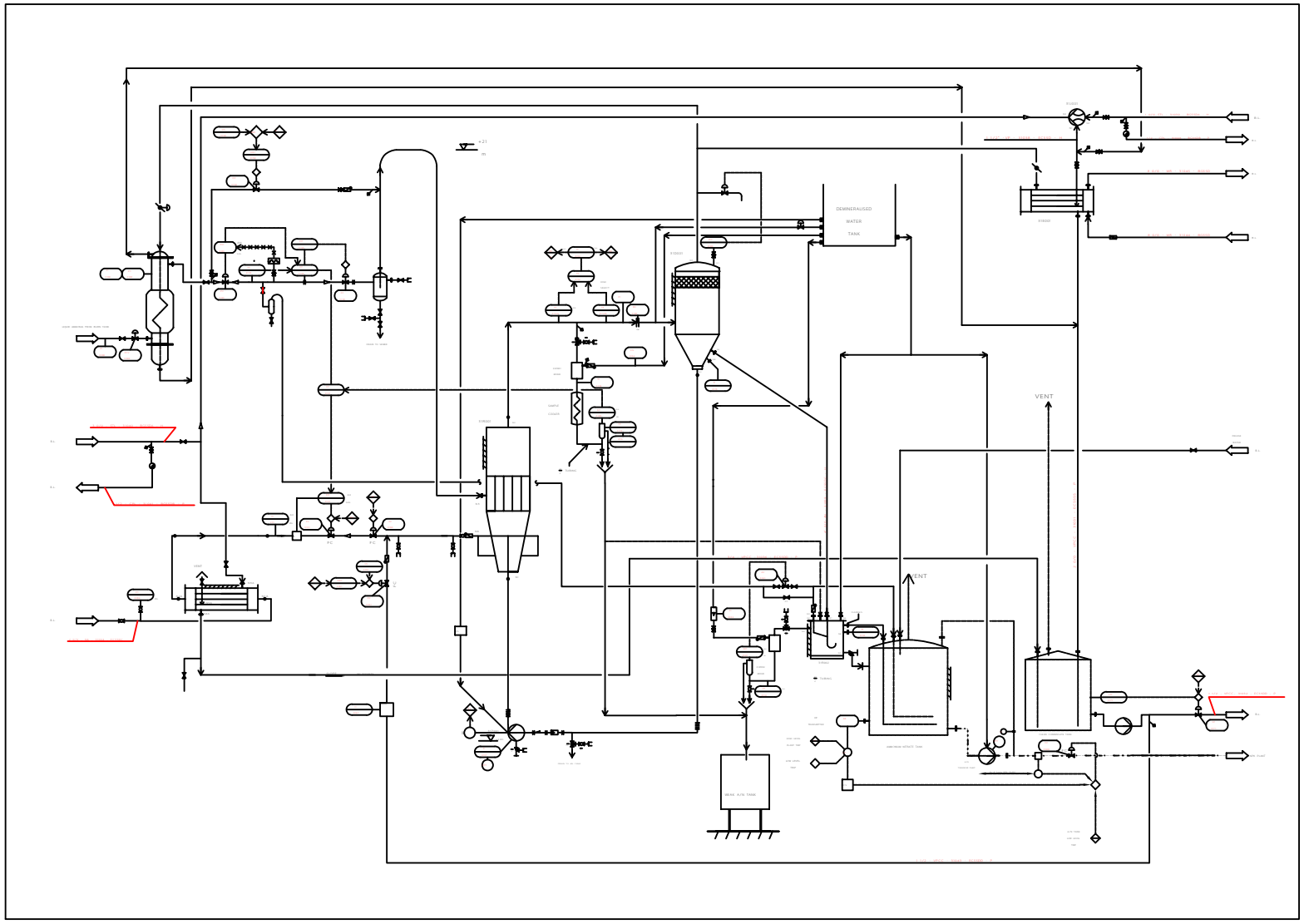
DEMINERALISED
WATER
TANK
VENT
VENT
BREAK A/N TANK